PFDM1

Installation Guide

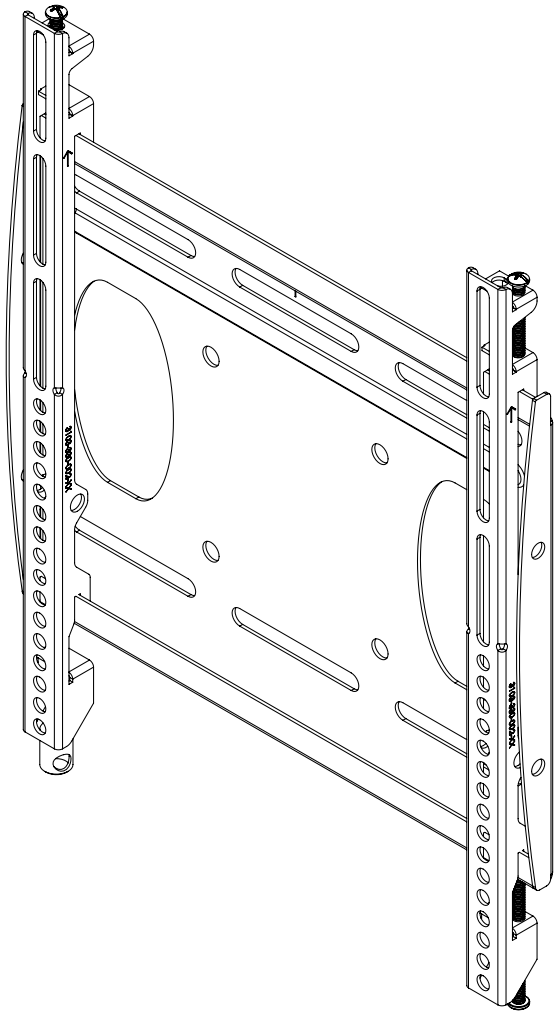

PREMIER MOUNTS

YOUR TRUSTED ADVISOR IN AV MOUNTING SOLUTIONS

www.mounts.com | North America 800.368.9700 | International +1-714-632-7100
1321 S. State College Blvd., Fullerton, CA 92831 USA

PFDM1
Installation Guide

Maximum Flat Panel Weight:
100 lb. / 45.35 kg.

Included components

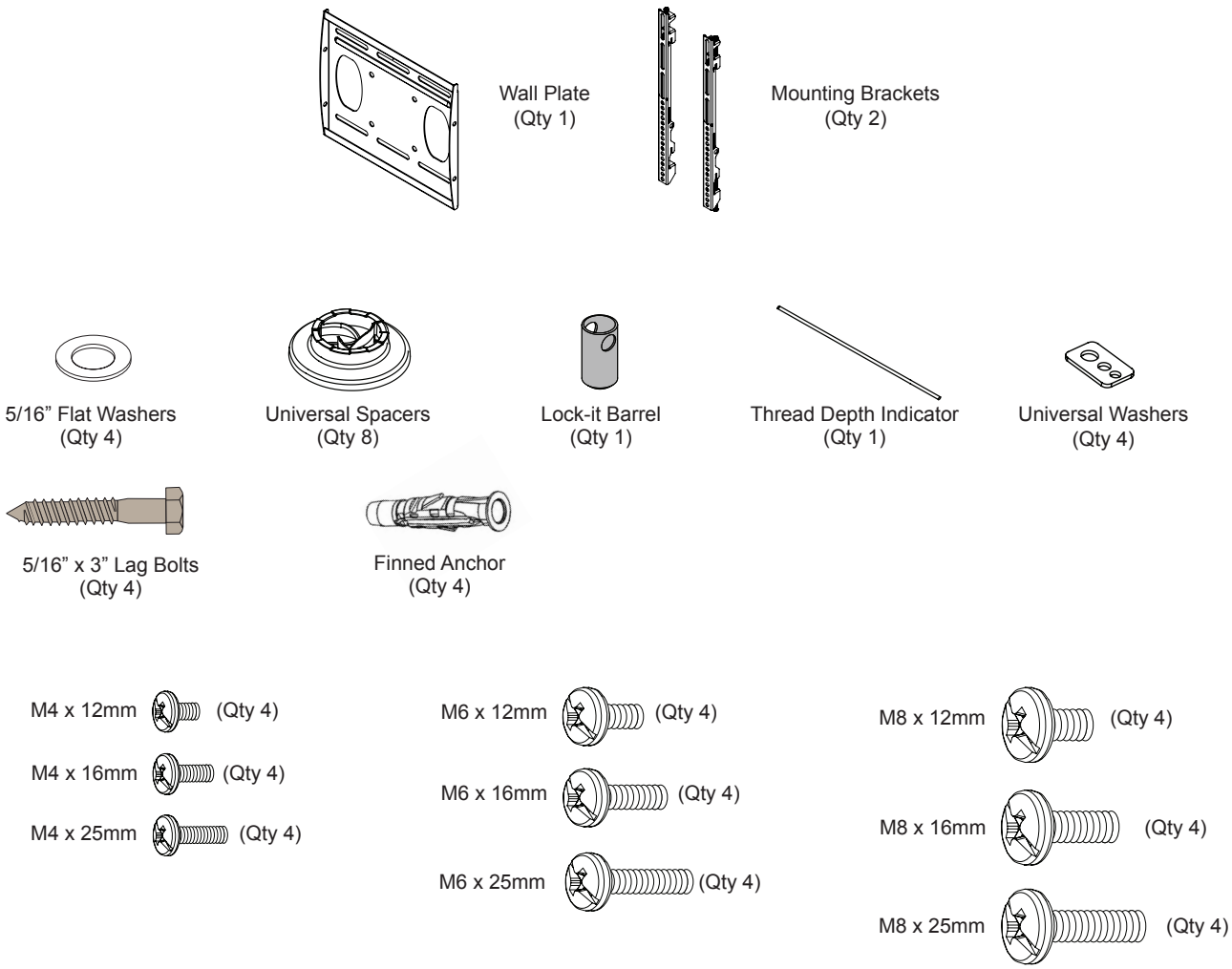

Required for installation

PREMIER MOUNTS
YOUR TRUSTED ADVISOR IN AV MOUNTING SOLUTIONS

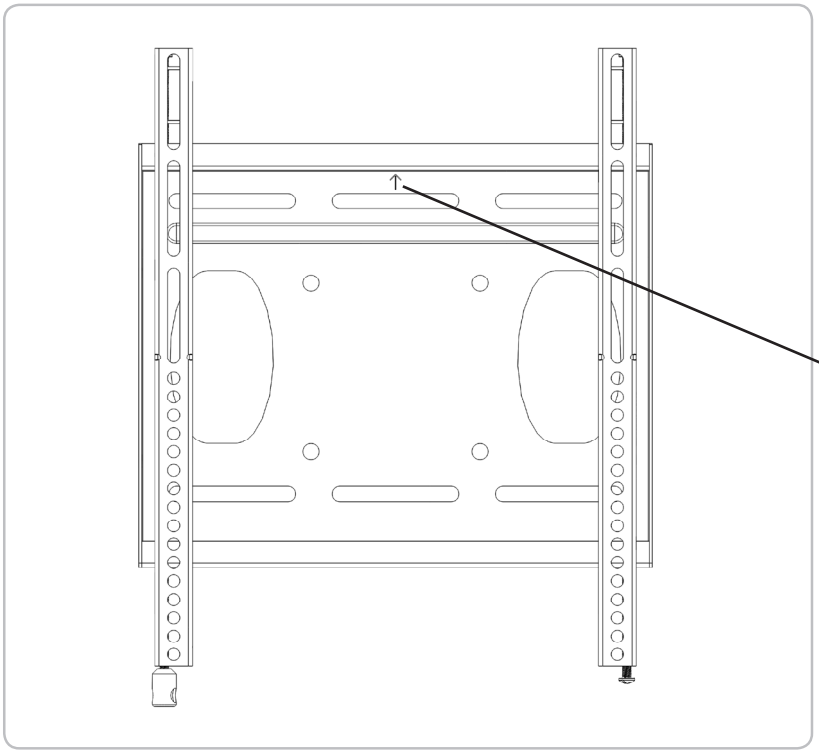

Introduction

Directional Mounting Arrow
The Directional Mounting Arrow stamped into the top of the PFDM1 wall mount indicates which edge is the top.

Mounting Safety
Two people are recommended for the installation of this mount.

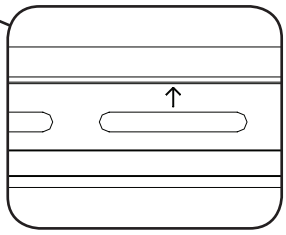

1

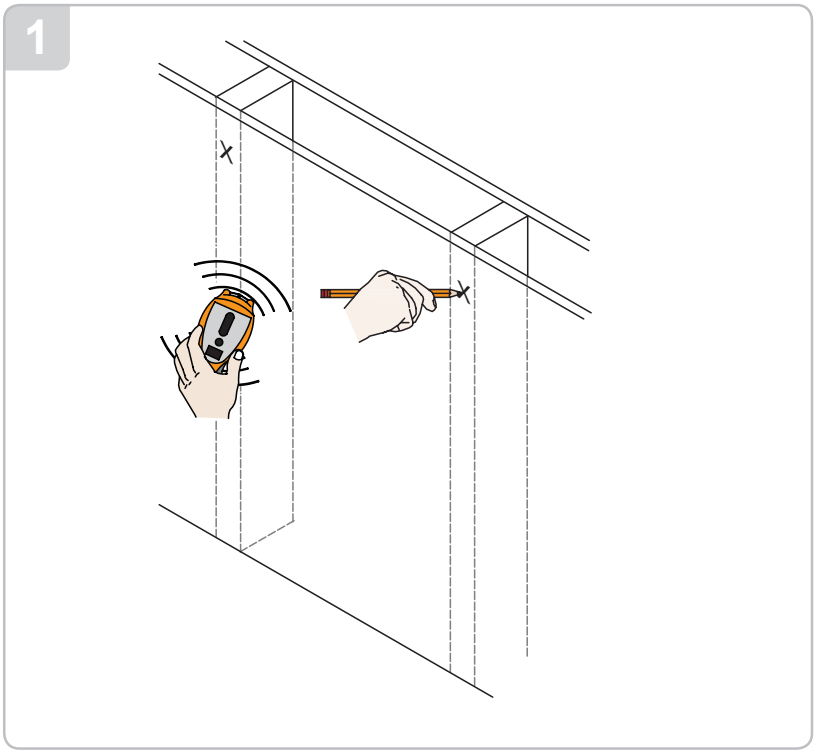

Wood Stud Installation

You must secure the wall plate to two (2) wall studs with a minimum of four (4) lag bolts (2 lag bolts for each stud found).

1) Use a stud finder to determine the center of wall studs in the vicinity of the wall plate.
2) Use a pencil to mark the center of each of the wall studs.

2

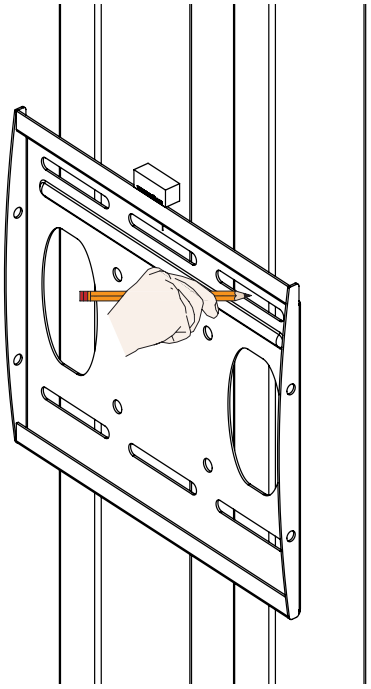

1) Place the wall plate against the wall in the desired viewing location.
2) Adjust the wall plate to align the mount slots in the wall plate with the center of the wall studs.
3) Level the wall plate.
4) Use a pencil to mark the upper right mounting location along the center of the wall stud.

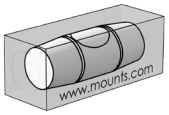

3

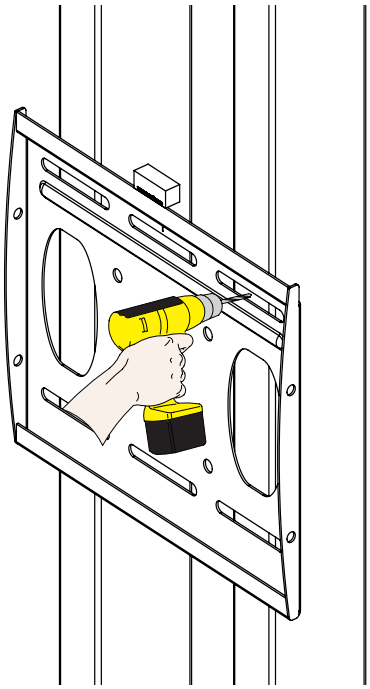

Drill a “pilot hole” in the center of the upper right mark using a 1/4” drill bit and power drill.

Only use a 1/4” drill bit when drilling the pilot holes.

4

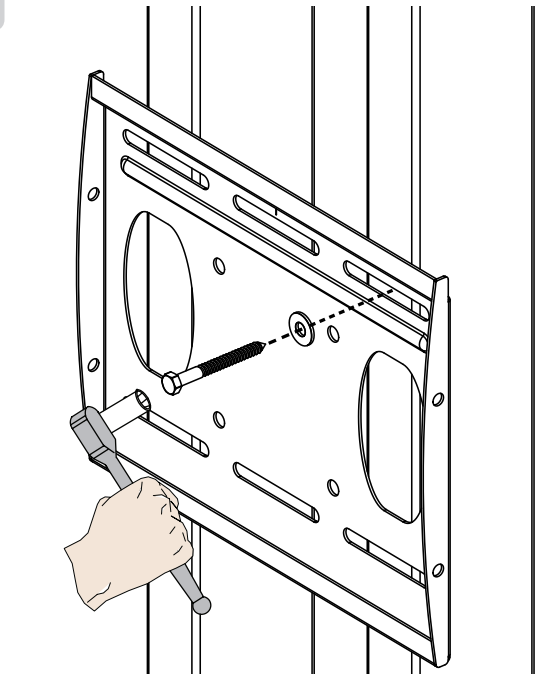

1) Place the wall plate against the wall and align it with the pilot hole.
2) Insert one (1) 5/16” x 3” lag bolt and one (1) 5/16” washer into the upper right mounting hole and tighten using a socket wrench and 1/2” socket.

Do not over tighten the lag bolt.

5

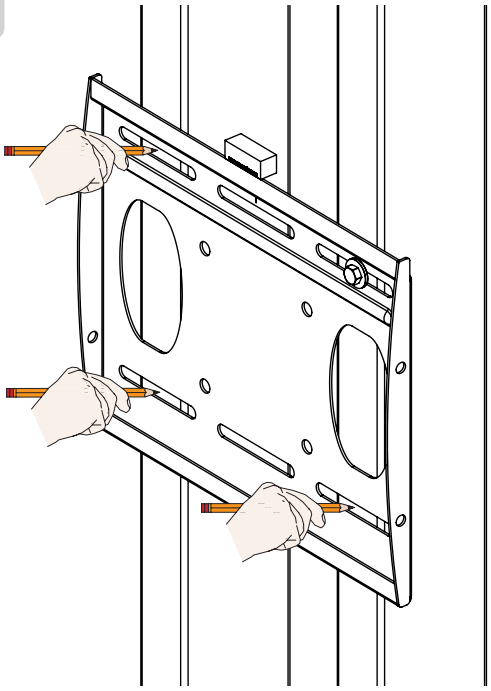

1) Level the wall plate.
2) Use a pencil to mark the remaining three (3) mounting locations along the center of each wall stud.

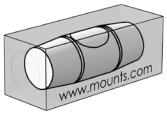

6

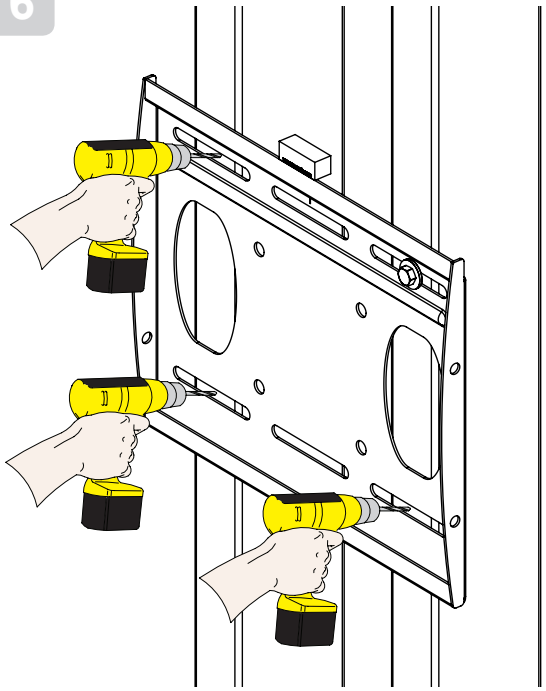

Drill a “pilot hole” in the center of each of the marks with a power drill and a 1/4” drill bit.

Only use 1/4” drill bit when drilling the pilot holes.

7

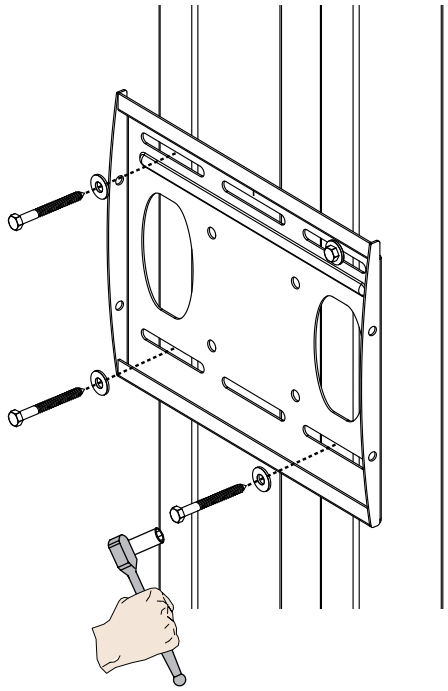

1) Insert one (1) 5/16” x 3” lag bolt and one (1) 5/16” washer into each pilot holes.
2) Tighten all lag bolts using a socket wrench and 1/2” socket.

Do not over tighten the lag bolts.

8

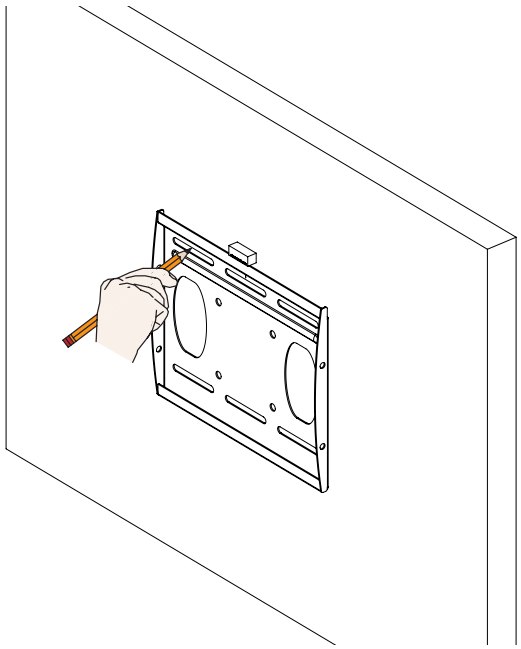

Concrete Wall Installation

Two people are recommended for this step; one person to level the wall plate and another person mark the mounting locations.

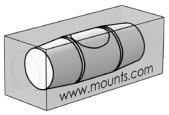

9

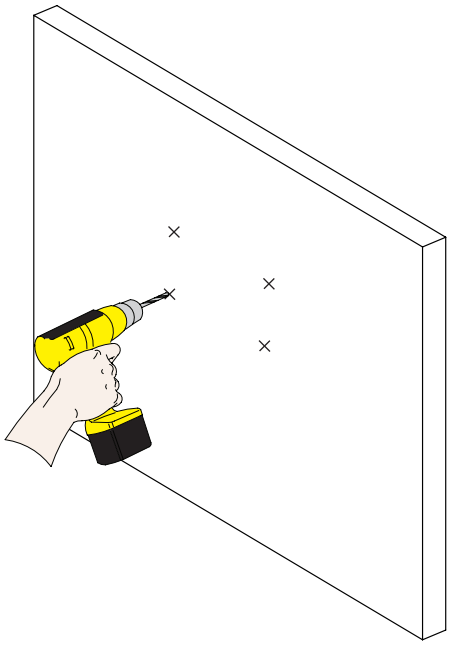

Drill 4 pilot holes of each mark using a drill and 3/8” masonry drill bit. Drill 3 inches deep.

10

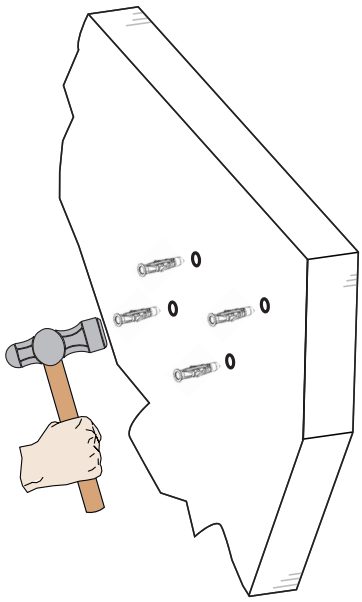

1) Insert the Finned anchors into each hole.
2) Lightly tap each Finned anchors into place with a hammer.

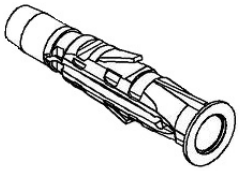

X 4

Finned Anchor

11

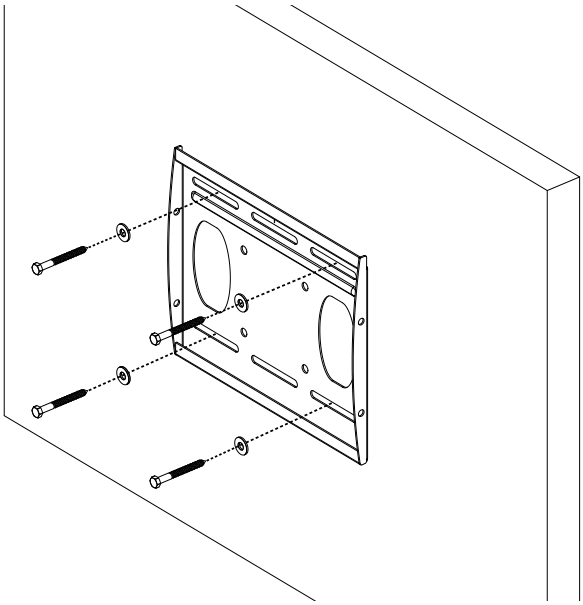

1) Insert one (1) 5/16” x 3” lag bolt and one (1) 5/16” washer into each pilot holes.
2) Tighten all lag bolts using a socket wrench and 1/2” socket.

Selecting the Mounting Hardware

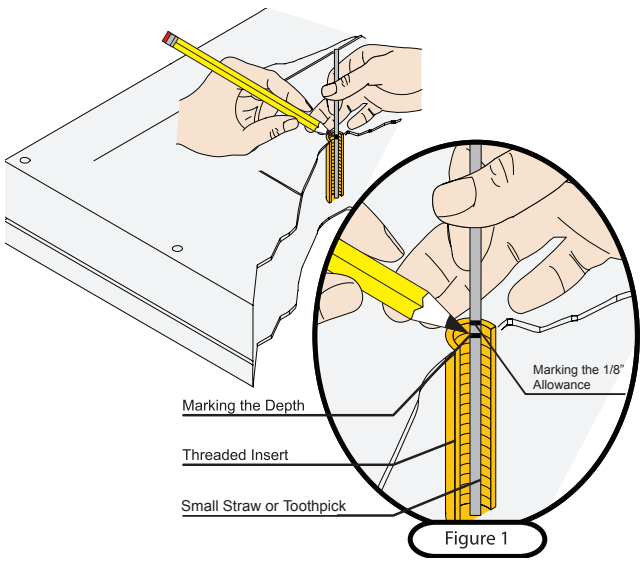

Figure 1

1) Insert a small straw or toothpick into the threaded inserts found on the back of the flat-panel.
2) Use a pencil to mark the depth of the threaded insert on the small straw or toothpick.
3) Mark the straw or toothpick 1/8" above the depth of the threaded insert, as shown in Figure 1.
4) Insert the small straw or toothpick into the remaining threaded inserts to compare and verify their depth using the straw or toothpick's 1/8" allowance mark.
5) Locate the correct diameter screw for the threaded insert.

If the screw you selected is longer than the 1/8" allowance mark on the small straw or toothpick, as shown in Figure 2 and Figure 3, do not use this screw. The screw length must not bypass the mark.

6) Test each size of the screws provided. The correct screws should thread easily into the mounting point and not pull out when tension is applied.

Figure 2

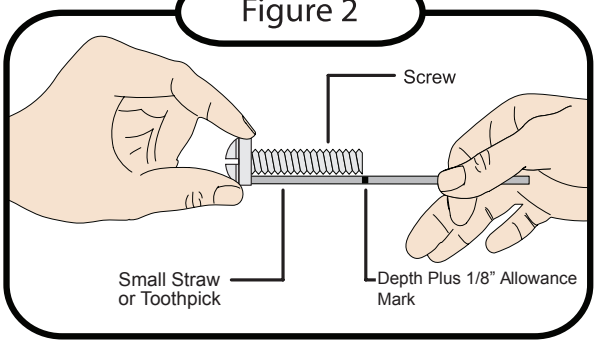

Figure 3

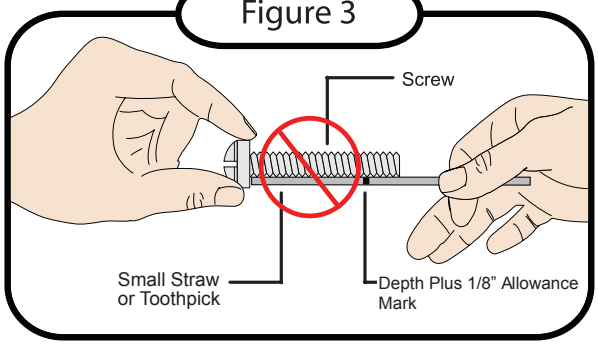

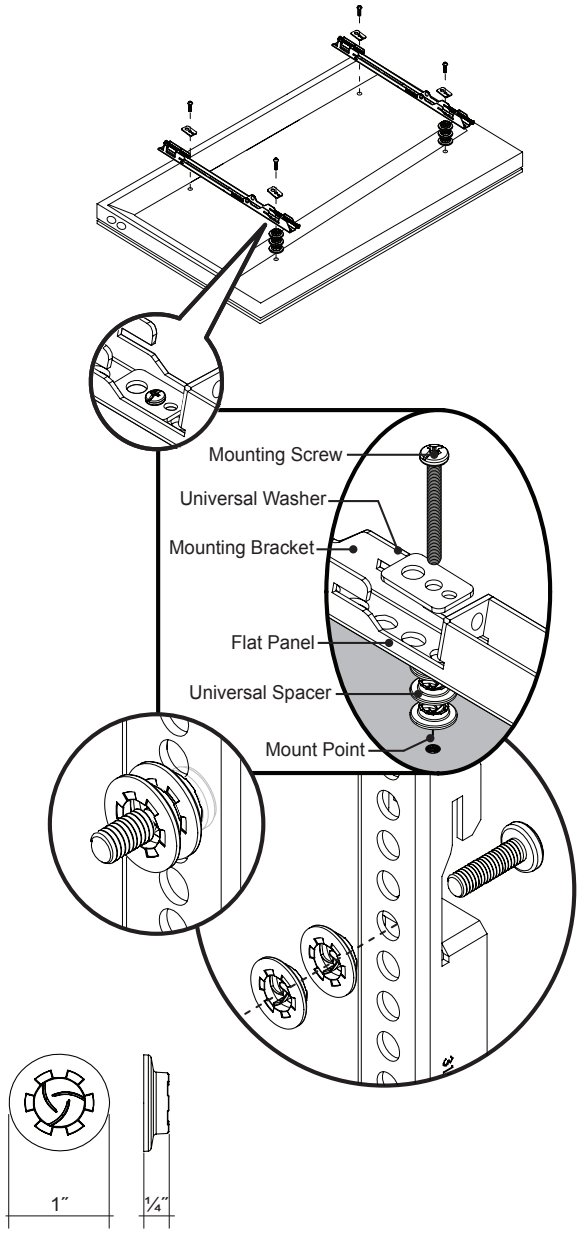

Universal Washer Installation

Premier Mounts' Universal Washers are designed to accommodate the various M4, M5, M6 and M8 hole sizes required by flat panels.

Do not place excessive pressure on the back of the flat panel, as this may damage your flat panel.

The Universal Washer must be installed between the head of the mounting screw and the mounting bracket as shown.

STOP Does your flat panel have:

- Recessed mount points?
- Uneven mount points?
- A curved back?
- Any obstruction near the mount point?

If **Yes**, you must install Universal Spacers. Remove the mounting brackets, Universal Washers, and mounting screws from the back of the flat panel. **Proceed to the "Universal Spacer Installation" section.**

If No, skip to the "Attaching the Mounting Bracket to the Flat Panel" section.

Universal Spacer Installation

Premier Mounts' Universal Spacers allow you to attach the mounting bracket to flat panels which have recessed or uneven mount points. Each Universal Spacer adds 1/4" to the distance between the mounting bracket and your flat panel.

The Universal Spacers must be stacked and oriented as shown.

The Universal Spacers must only be installed between the mounting bracket and your flat panel.

The Universal Spacers will fit M4, M5, M6 and M8 screw sizes.

Proceed to the "Attaching the Mounting Bracket to the Flat Panel" section.

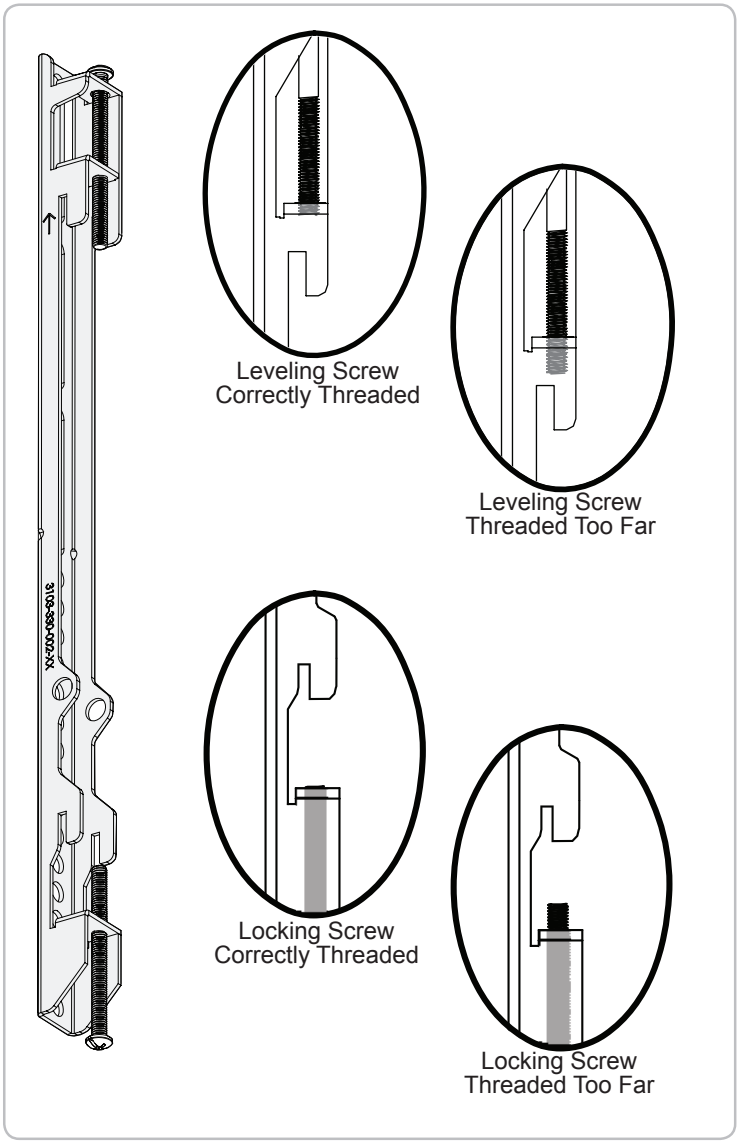

Lock and Leveling Screw Installation

Leveling Screw Installation

You must install the leveling screws before you attach the mounting bracket to the back of the flat panel. The leveling screws consists of two (2) M6 x 75mm screws.

Thread one (1) leveling screw into the top mounting hole on each of the mounting brackets. Make sure the leveling screw is securely threaded into the mounting tab before proceeding.

Do not thread the leveling screw any further once it is even with the mounting tab. Threading the leveling screw any further will prevent you from safely attaching the flat panel to the wall plate.

Locking Screw Installation

You must install the locking screws before you attach the mounting bracket to the back of the flat panel. The locking screws consists of two (2) M6 x 75mm screws.

Thread one (1) locking screw into the bottom mounting hole on each of the mounting brackets. Make sure the locking screw is securely threaded into the mounting tab before proceeding.

Do not thread the locking screw any further once it is even with the mounting tab. Threading the locking screw any further will prevent you from safely attaching the flat panel to the wall plate.

Proceed to the "Lock-It™ Security Barrel Installation" section.

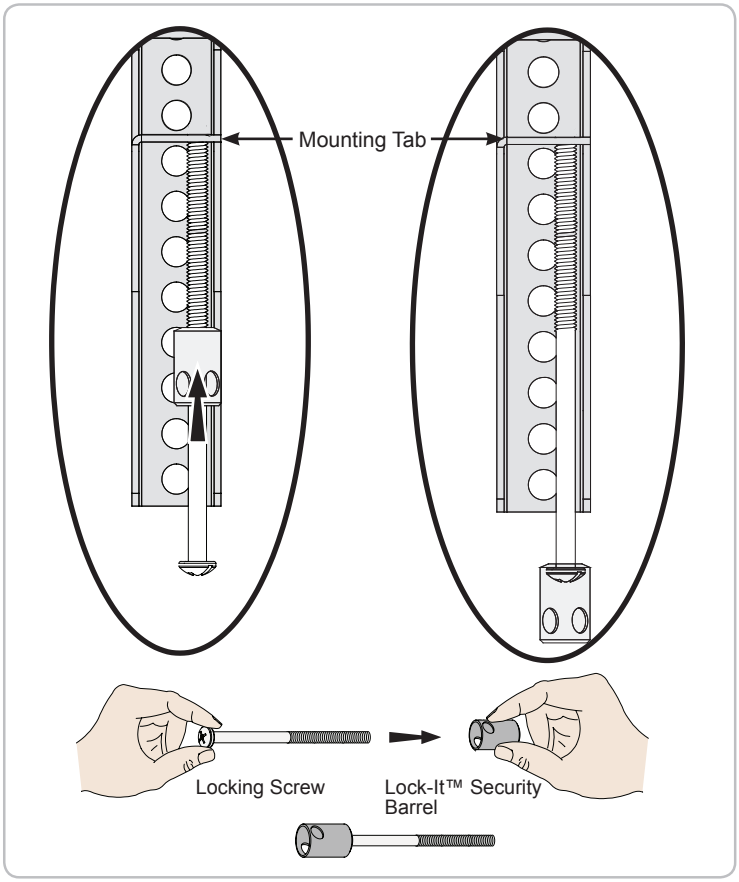

Lock-it™ Security Barrel Installation (Optional)

Optional security configurations include:

- PCB-CSL1 (sold separately)
- Padlock (Combination or Keyed; commercially available)

1) Remove the locking screw from the mounting bracket.
2) Place the locking screw into and through the security barrel (see illustration below).
3) Re-insert the locking screw and security barrel into the mounting bracket.
4) Tighten the locking screw and security barrel until seated in the mounting tab.

Do not thread the locking screw any further once it is even with the mounting tab (see illustration to the right). Threading the locking screw any further will prevent you from safely attaching the flat panel to the wall plate.

Do not overtighten the locking screw.

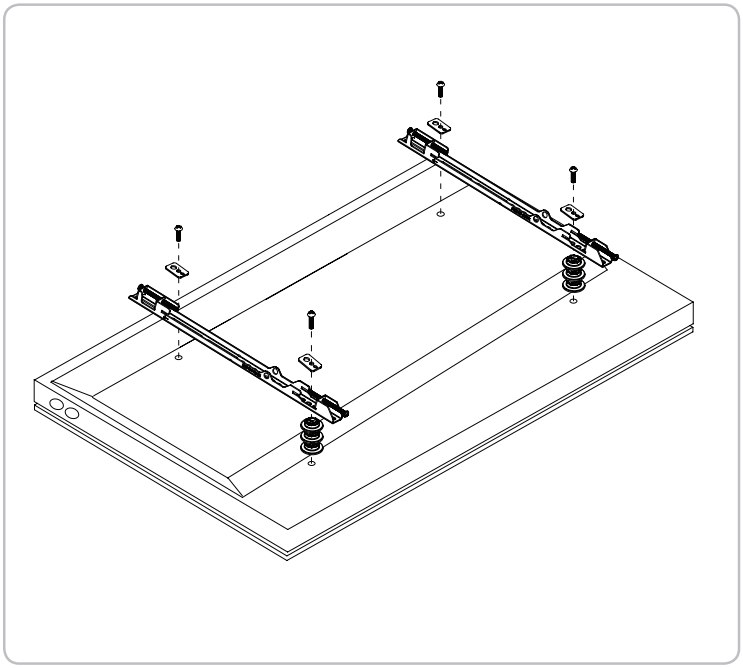

Attaching the Mounting Bracket to the Flat Panel

This section presumes that you have read and understood these sections:

- Selecting the Proper Mounting Hardware
- Universal Washer Installation
- Universal Spacer Installation

1) Place your flat panel screen-side down on a soft, flat surface.
2) Identify the number and location of the thread inserts on the back of your flat panel.
3) Align the holes on each mounting bracket with the thread inserts on the back of your flat panel.
4) Secure each mounting bracket to your flat panel by inserting a minimum of two (2) screws per bracket.

Attaching the Flat Panel to the Wall Plate

This section requires two people.

Do not release your flat panel until you are certain that top and bottom hooks of both mounting brackets are securely seated on the upper and lower mounting rails of the wall panel.

1) Raise the flat panel past the top and bottom mounting rails on the wall panel.
2) Slide the flat panel down slowly, keeping it close to the wall.
3) Engage the top and bottom mounting brackets to the rails of the wall plate.

Proceed to the "Mounting Bracket Adjustments" section.

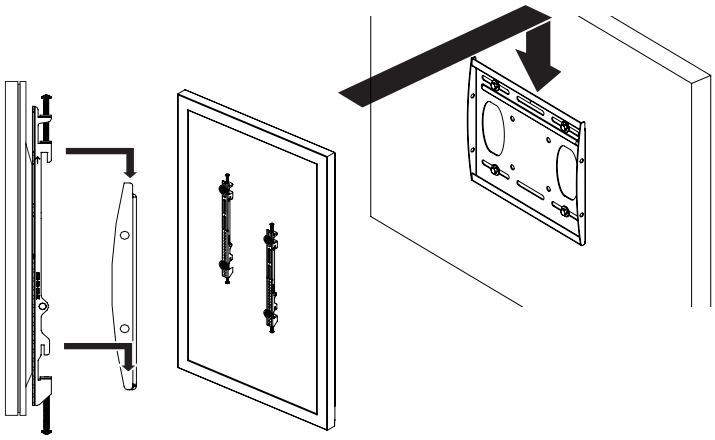

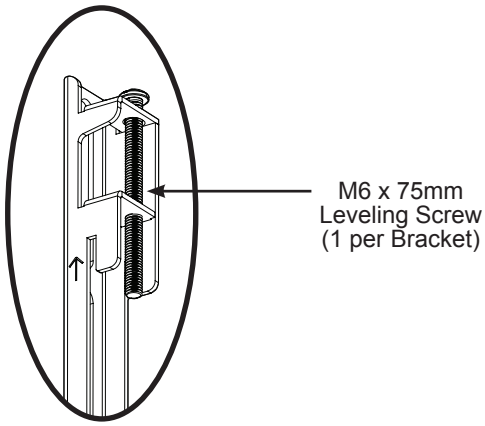

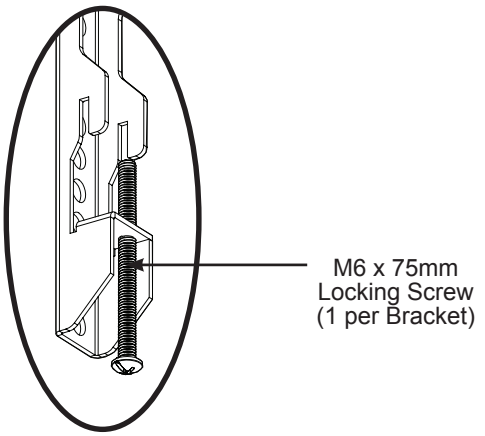

Mounting Bracket Adjustments

Level Screw Adjustment

If your flat panel is tilted too far to one side, the leveling screws will allow you to compensate for this tilt by simply adjusting the screws with a screwdriver.

1) Loosen both locking screws.
2) Adjust the tilt of your flat panel.
3) Tighten both locking screws.

Caution!
It is possible to dislodge your flat panel while you level your flat panel. Use extreme caution until you tighten the locking screws.

Locking Screw Adjustment

After you have finished leveling your flat panel, be sure to tighten the two (2) M6 x 75mm locking screws.

Do not overtighten the locking screws.

Utilizing the Security Barrel

Your PFDM1 Mount includes one (1) Security Barrel which can provide additional theft deterrence for your flat panel.

PCB-CSL1 Security Cable

1) Thread the cable through the hole on the security barrel.

2) Attach the PCB-CSL1 locking mechanism and secure it using the supplied key.

Padlock

1) Place the locking hook through the hole of the security barrel.

2) Snap lock and locking hook together.

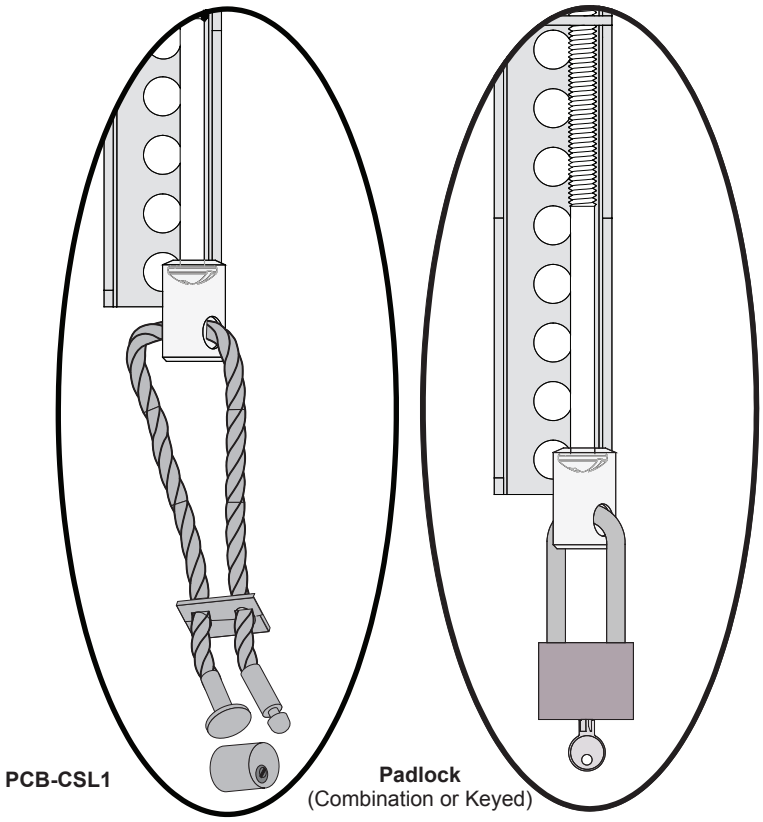

Optional Floor Stands

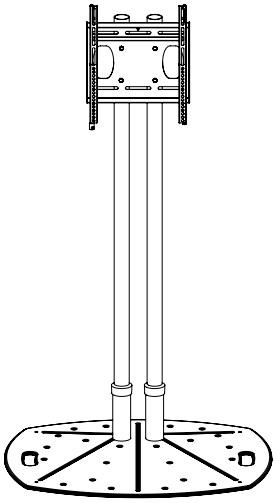

TL BASE

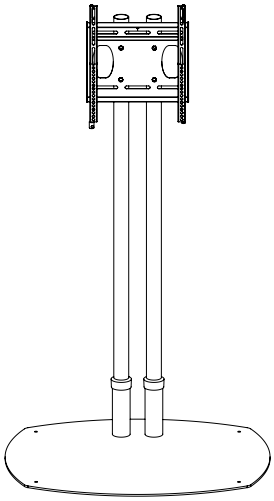

TS BASE

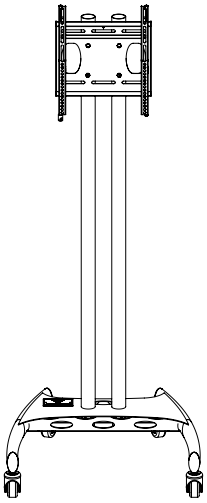

BW BASE

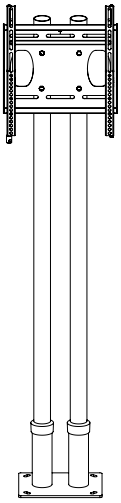

PSD-DPAB

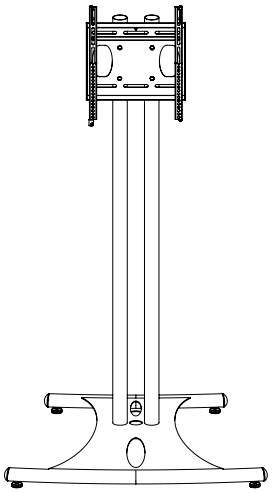

EB BASE

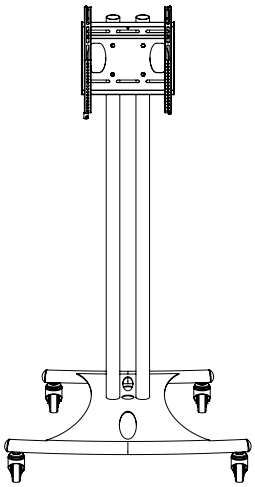

EB BASE C

Optional Pole Adapters

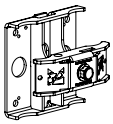

PSD-HDCA (Single Display Adatpter)

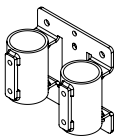

PSD-SPA (Single Display Adatpter)

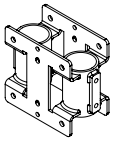

PSD-DPB (Double Display Back to Back Adatpter)

Optional Poles

T40 (40” Tubes)
T60 (60” Tubes)
T72 (72” Tubes)
T84 (84” Tubes)

Optional NTP Pipes

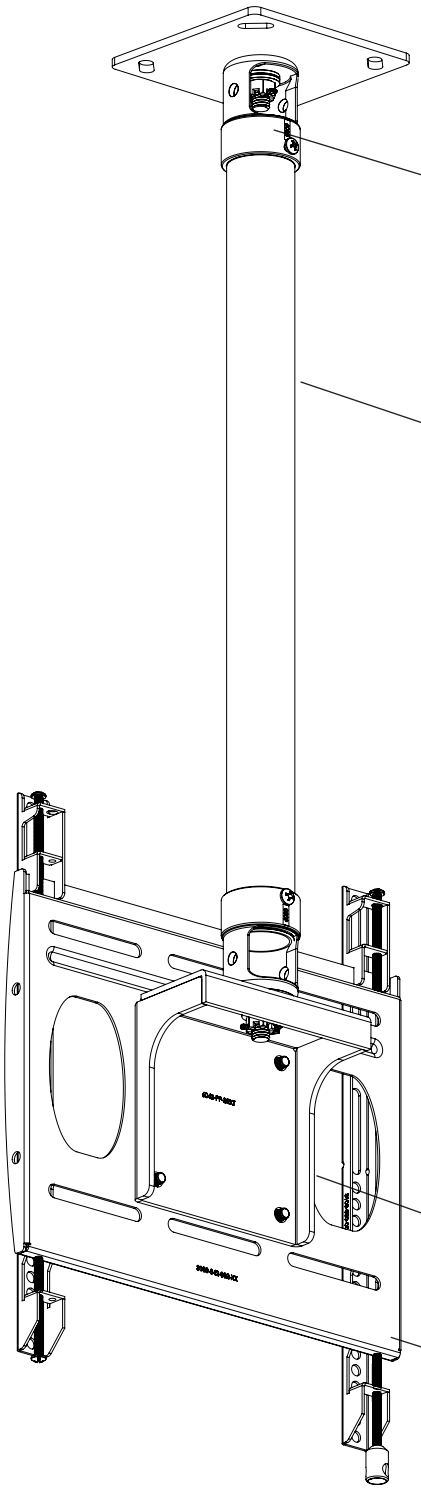

See next page for ceiling mount options.

NTP pipe size options:

PWH-10B	(10 inch black)
PWH-10W	(10 inch white)
PWH-12B	(12 inch black)
PWH-12W	(12 inch white)
PWH-18B	(18 inch black)
PWH-18W	(18 inch white)
PWH-24B	(24 inch black)
PWH-24W	(24 inch white)
PWH-36B	(36 inch black)
PWH-36W	(36 inch white)
PWH-48B	(48 inch black)
PWH-48W	(48 inch white)

For other lengths,
Call us at (800) 368-9700
(International) +1-714-632-7100

PSD-S (Adapter)

Mount

Optional Ceiling Mounts

I-Beam

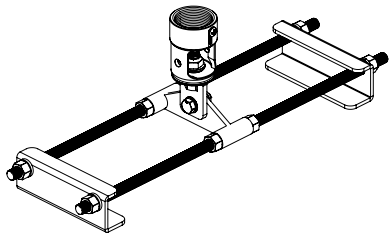

PP-ITC48C (4 inch-8 inch I-Beam)
PP-ITC1016C (10 inch-16 inch I-Beam)

Unistrut

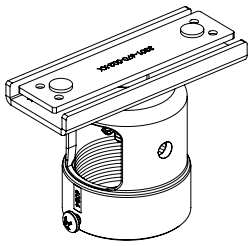

PP-UA (1.5 inch coupler fitting)
PP-UA2 (2 inch coupler fitting)

Vaulted

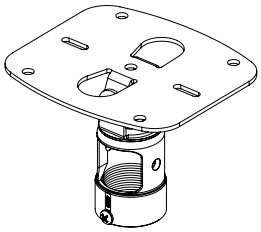

PP-TL

Solid

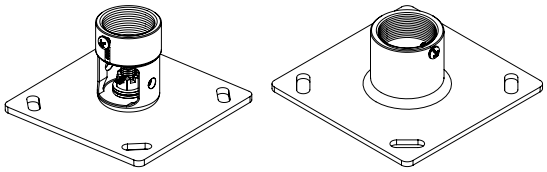

PP-5 (1.5 inch coupler fitting)
PP-5A (1.5 inch coupler with cable access holes)
PP-6 (2 inch coupler fitting)
PP-6A (2 inch with cable access holes)

Pipe

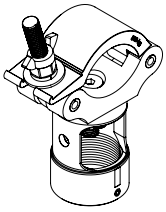

PCC-1-1-2 (1.5 inch coupler Fitting)
PCC-2 (2 inch coupler Fitting)

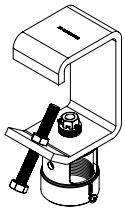

MCC-2 (2 inch C-Clamp)
MCP-2 (2 inch C-Clamp with Pipe Nipple)

PREMIER MOUNTS
LIMITED LIFETIME WARRANTY

What and Who is Covered by this Limited Lifetime Warranty
Premier Mounts warrants all mounting products to be free from defects in material and workmanship for the lifetime of the original installation of the product.

What Premier Mounts Will Do
At the sole option of Premier Mounts, Premier Mounts will repair or replace any product or product part that is defective. If Premier Mounts chooses to replace a defective product or part, a replacement product or part will be shipped to you at no charge, but you must pay any related labor costs.

What is Not Covered: Limitations
Premier Mounts disclaims any liability for damage to mounts, adapters, displays, projectors, other property, or personal injury resulting, in whole or in part, from improper installation, modification, use or misuse of its products.

NOTWITHSTANDING ANYTHING TO THE CONTRARY IN THIS WARRANTY, THIS WARRANTY IS LIMITED TO FIVE YEARS FROM THE DATE OF PURCHASE IN THE EVENT THAT THE WARRANTED PRODUCT IS COMMERCIALLY RENTED OUT.

Electrical products and components, such as amplifiers, speakers, motors, switches remote controls and related electrical items, are backed by a 3-year warranty.

Premier Mounts disclaims all other warranties, express or implied, including warranties of merchantability and fitness for a particular purpose. Premier Mounts is not responsible for incidental or consequential damages, including but not limited to, inability to use its products or labor costs for removing and replacing defective products or parts. Some states do not allow the exclusion or limitation of incidental or consequential damages, so the above limitation or exclusion may not apply to you.

What Customers Must Do for Warranty Service
If you discover a problem that you think may be covered by the warranty, you must report it in writing to the address below within thirty (30) days. Proof of purchase (an original sales receipt) from the original consumer purchaser must accompany all warranty claims. Warranty claims must also include a description of the problem, the purchaser's name, address, and telephone number. General inquiries can be addressed to Premier Mounts Customer Service at 1-800-368-9700. Warranty claims will not be accepted over the phone or by fax.

Premier Mounts
Attn: Warranty Claim
1321 S. State College Blvd.
Fullerton, CA 92831 USA

How State Law Applies
This warranty gives you specific legal rights, and you may also have other rights which vary from state to state.

Premier Mounts intends to make this manual accurate and complete. However, Premier Mounts makes no claim that the information contained herein covers all details, conditions or variations, nor does it provide for every possible contingency in connection with the installation or use of this product. The information contained in this document is subject to change without notice or obligation of any kind. Premier Mounts makes no representation of warranty, expressed or implied, regarding the information contained herein. Premier Mounts assumes no responsibility for accuracy, completeness or sufficiency of the information contained in this document.