RTM-L
Installation Guide

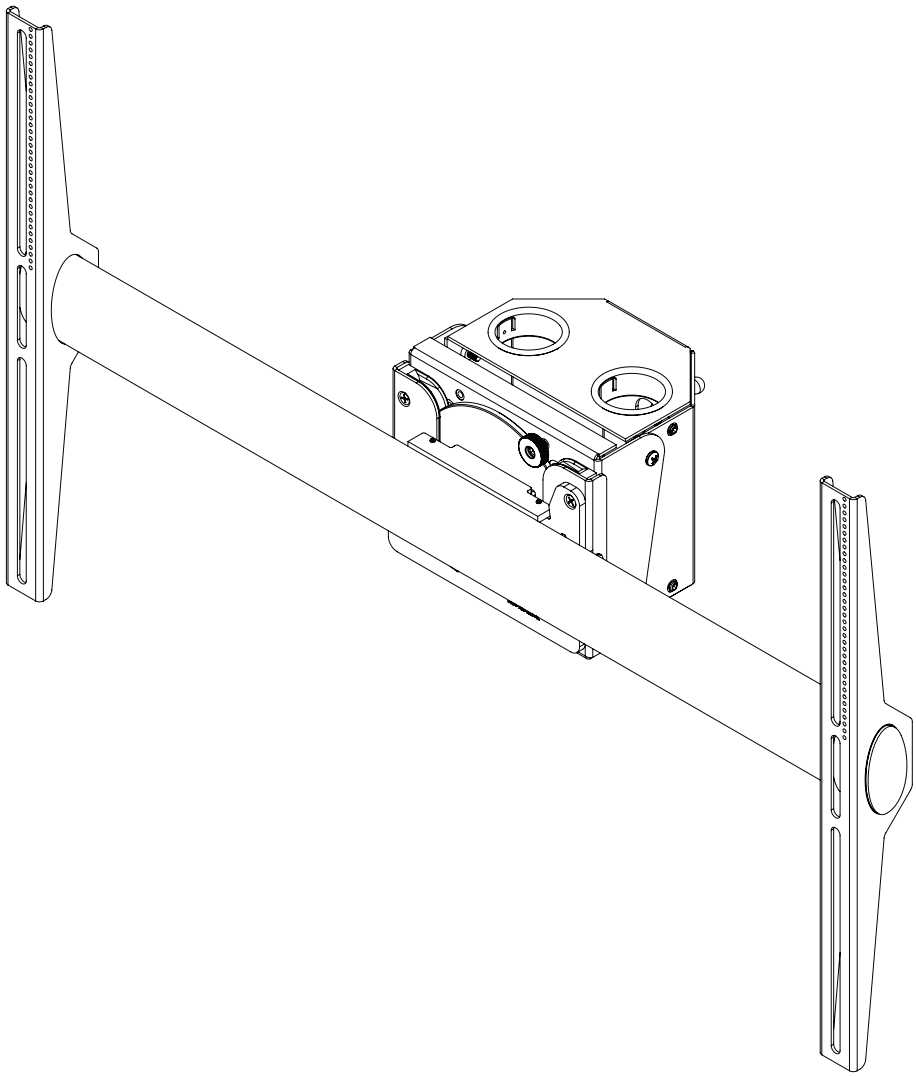

PREMIER MOUNTS

www.mounts.com | North America 800.368.9700 | International +1-714-632-7100
2620 Palisades Drive, Corona, CA 92882

9531-009-011-0X v5.2
publ. 02/08/19

RTM-L
Installation Guide

Weight Limit

Maximum Flat Panel Weight: **160 lbs.**

Warning Statements

PRIOR TO THE INSTALLATION OF THIS PRODUCT, THE INSTALLATION INSTRUCTIONS MUST BE READ AND COMPLETELY UNDERSTOOD. KEEP THESE INSTALLATION INSTRUCTIONS IN AN EASILY ACCESSIBLE LOCATION FOR FUTURE REFERENCE.

PREMIER MOUNTS DOES NOT WARRANT AGAINST DAMAGE CAUSED BY THE USE OF ANY PREMIER MOUNTS PRODUCT FOR PURPOSES OTHER THAN THOSE FOR WHICH IT WAS DESIGNED OR DAMAGE CAUSED BY UNAUTHORIZED ATTACHMENTS OR MODIFICATIONS, AND IS NOT RESPONSIBLE FOR ANY DAMAGES, CLAIMS, DEMANDS, SUITS, ACTIONS OR CAUSES OF ACTION OF WHATEVER KIND RESULTING FROM, ARISING OUT OF OR IN ANY MANNER RELATING TO ANY SUCH USE, ATTACHMENTS OR MODIFICATIONS.

THE SURFACE MUST BE CAPABLE OF SUPPORTING AT LEAST FOUR TIMES THE WEIGHT OF THE DISPLAY. IF NOT, THE SURFACE STRUCTURE MUST BE REINFORCED. THE MAXIMUM WEIGHT THAT CAN BE USED WITH THIS PRODUCT IS 160 LBS. PROPER INSTALLATION PROCEDURE BY A QUALIFIED SERVICE TECHNICIAN, AS OUTLINED IN THE INSTALLATION INSTRUCTIONS, MUST BE ADHERED TO. FAILURE TO DO SO COULD RESULT IN SERIOUS PERSONAL INJURY, OR EVEN DEATH.

SAFETY MEASURES MUST BE PRACTICED AT ALL TIMES DURING THE ASSEMBLY OF THIS PRODUCT. USE PROPER SAFETY GEAR AND TOOLS FOR THE ASSEMBLY PROCEDURE TO PREVENT PERSONAL INJURY.

At least two qualified people should perform the assembly procedure. Injury and/or damage can result from dropping or mishandling the display.

If mounting to studs, make sure that the mounting screws are anchored into the center of the studs. Use of an edge-to-edge stud finder is recommended.

Be aware of the mounting environment. If drilling and/or cutting into the mounting surface, always make sure that there are no electrical wires in wall. Cutting/drilling into an electrical line may cause serious injury.

Make sure there are no water lines inside the wall where the mount is to be located. Cutting/drilling into a water line may cause severe water damage to the mounting surface.

This product is intended for indoor use only. Use of this product outdoors could lead to product failure and personal injury.

Do not install near sources of high heat. Do not install on a structure that is prone to vibration, movement or chance of impact.

Installation Tools:

www.mounts.com | North America 800.368.9700 | International +1-714-632-7100

Included Components:

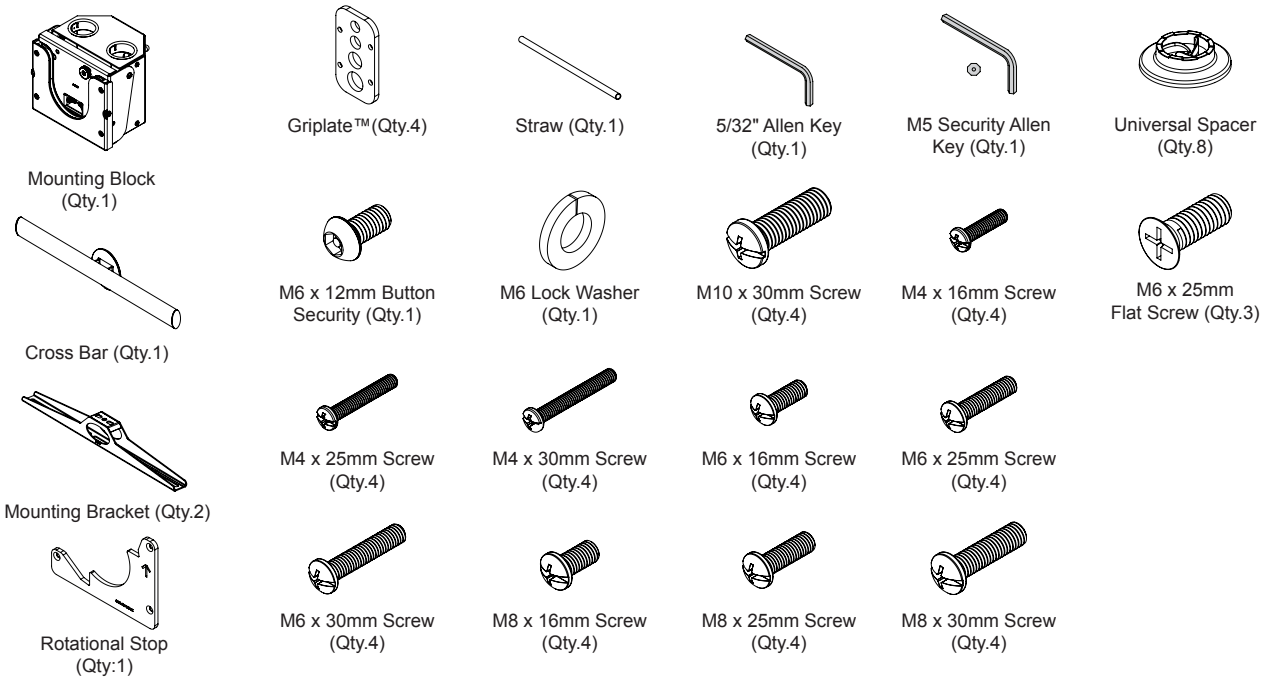

1

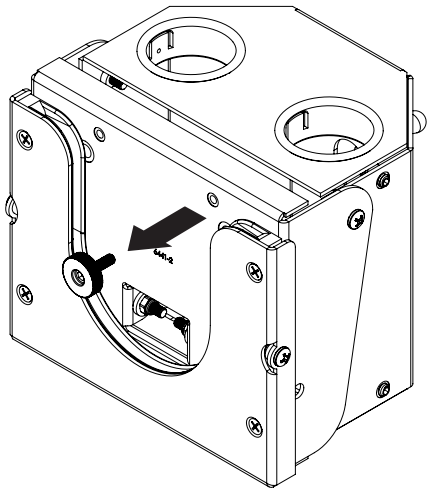

Remove the M6 Knurl Knob from the mounting block and place it aside.

2

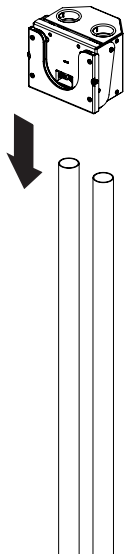

Slide the mounting block over the tubes.

3

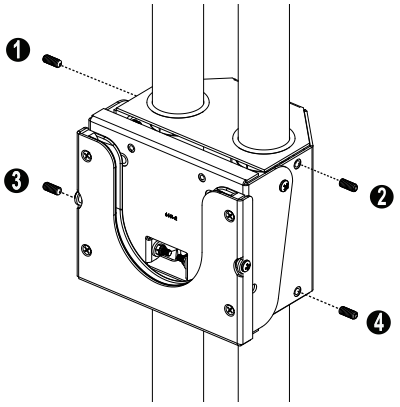

Tighten the four (4) pre-installed M8 set screws using the supplied 5/32" Allen Key.

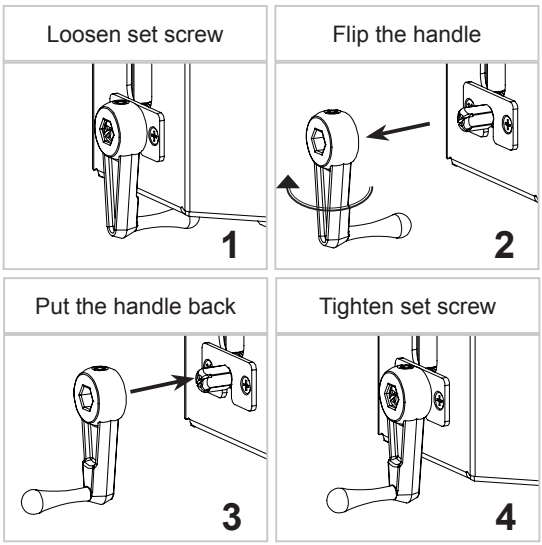

Reorientate the handle

4

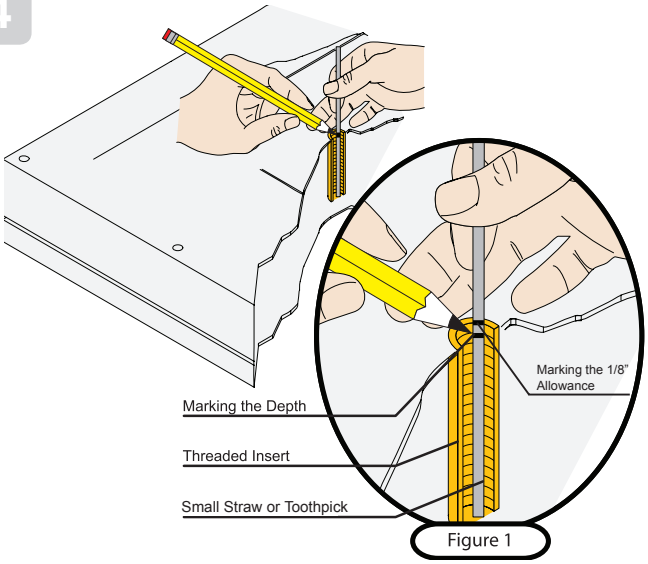

Figure 1

Selecting the Mounting Hardware

1) Insert a small straw or toothpick into the threaded inserts found on the back of the flat-panel.
2) Use a pencil to mark the depth of the threaded insert on the small straw or toothpick.
3) Mark the straw or toothpick 1/8" above the depth of the threaded insert, as shown in Figure 1.
4) Insert the small straw or toothpick into the remaining threaded inserts to compare and verify their depth using the straw or toothpick's 1/8" allowance mark.
5) Locate the correct diameter screw for the threaded insert.

If the screw you selected is longer than the 1/8" allowance mark on the small straw or toothpick, as shown in Figure 2 and Figure 3, do not use this screw. The screw length must not bypass the mark.

6) Test each size of the screws provided.
   The correct screws should thread easily into themounting point and not pull out when tension is applied.

Figure 2

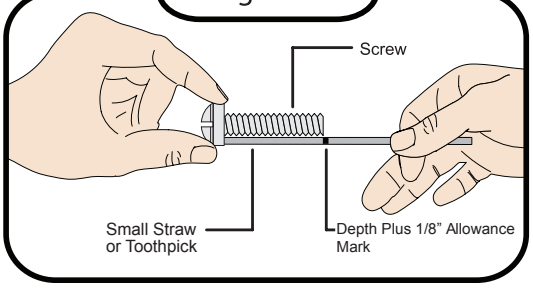

Figure 3

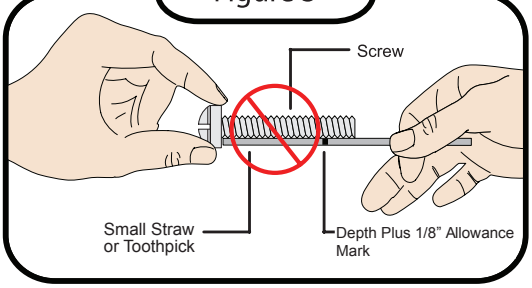

5

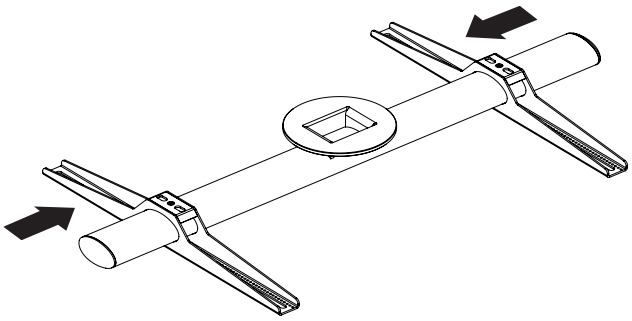

Slide the mounting brackets into the cross bar.

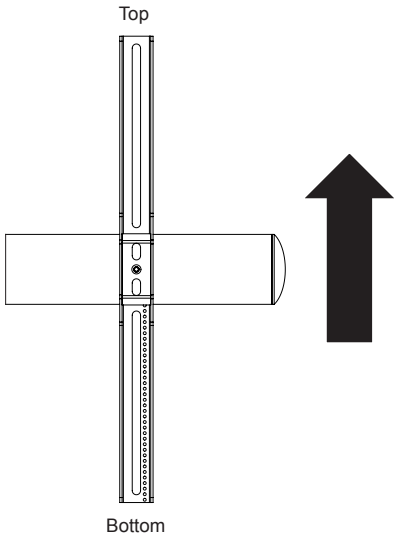

6

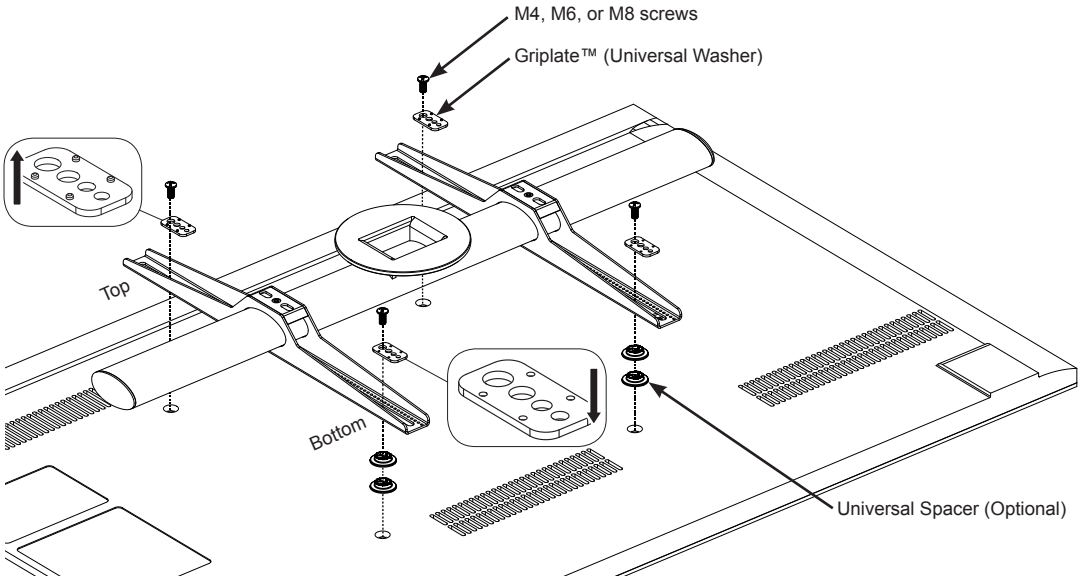

Align the brackets to the display mounting holes. Use the depth measuring straw to determine the appropriate hardware. Use four (4) M4, M6, or M8 screws depending on display and four (4) Griplate™ (Universal Washer). Use Universal Spacer if necessary.

7

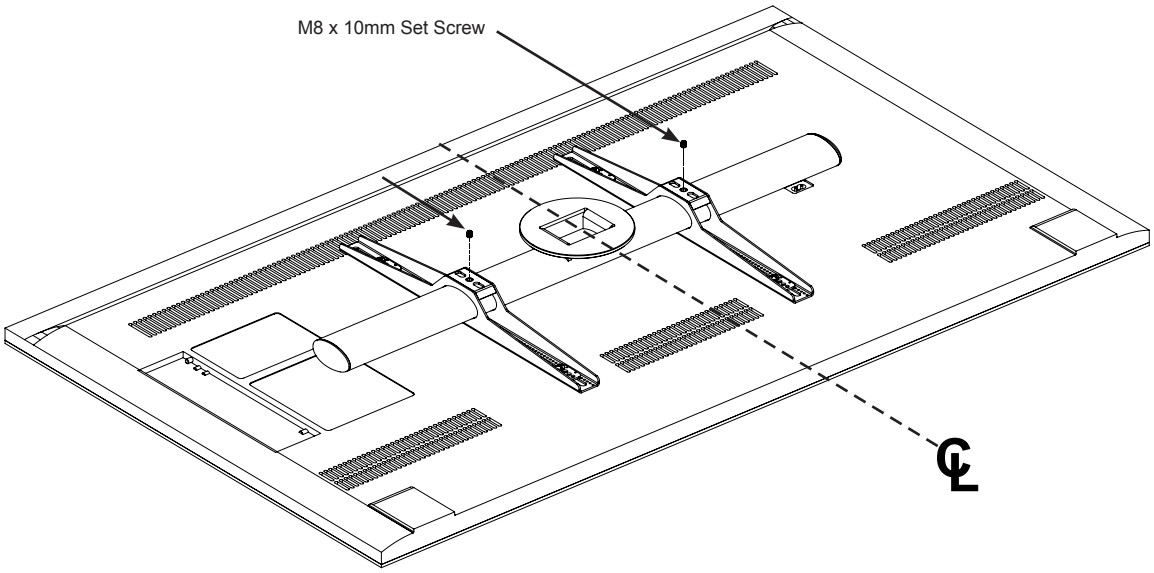

Center the cross bar to the display and tighten the two (2) M8 x 10 Set Screws using the 5/32" Allen Key to secure the brackets.

8

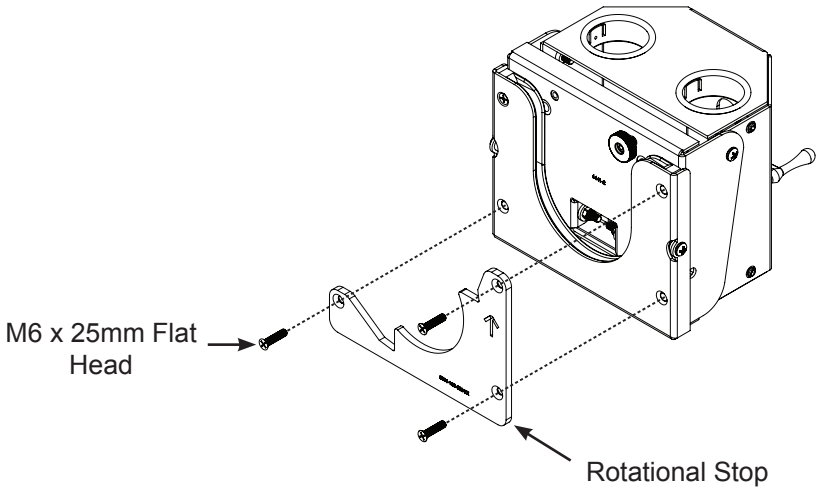

1. Install the Rotational Stop with (3) M6 x 25mm Flat Head Screw.
2. Reversible in either left or right orientation.

9

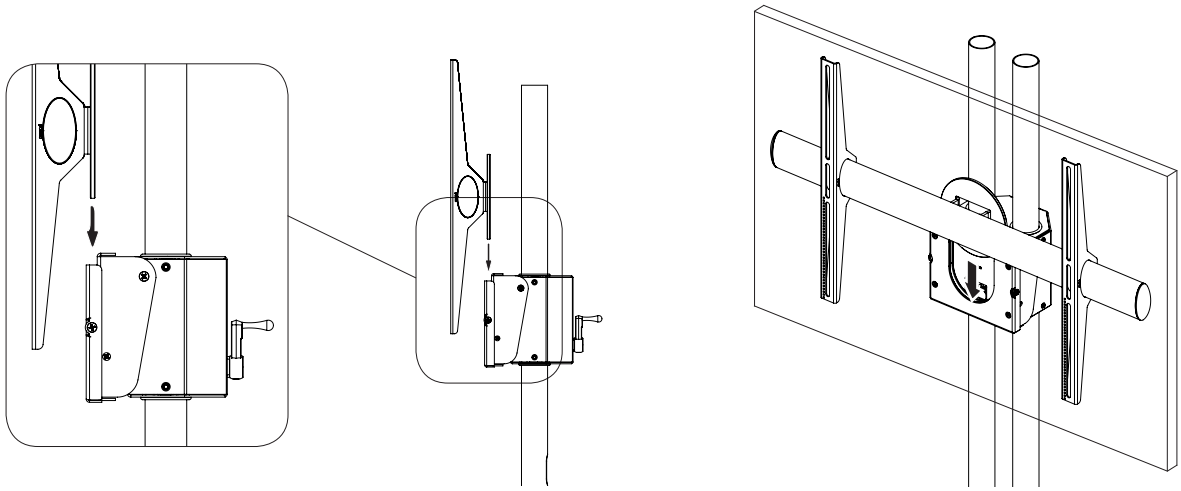

Two persons are recommended for this step. Lift the display bar and place the disk it into the receiver plate.

10

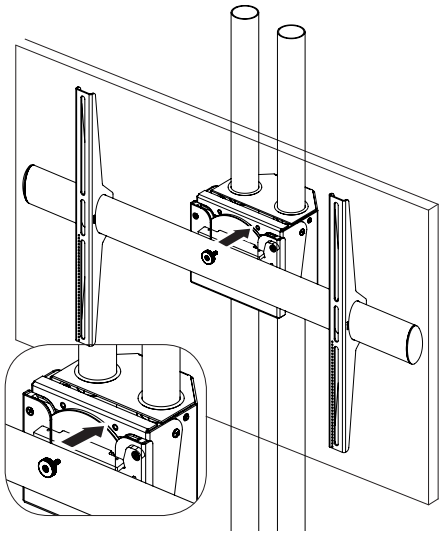

Install the M6 Knurl Knob removed from step 1 to secure the cross bar from dislodging.

11

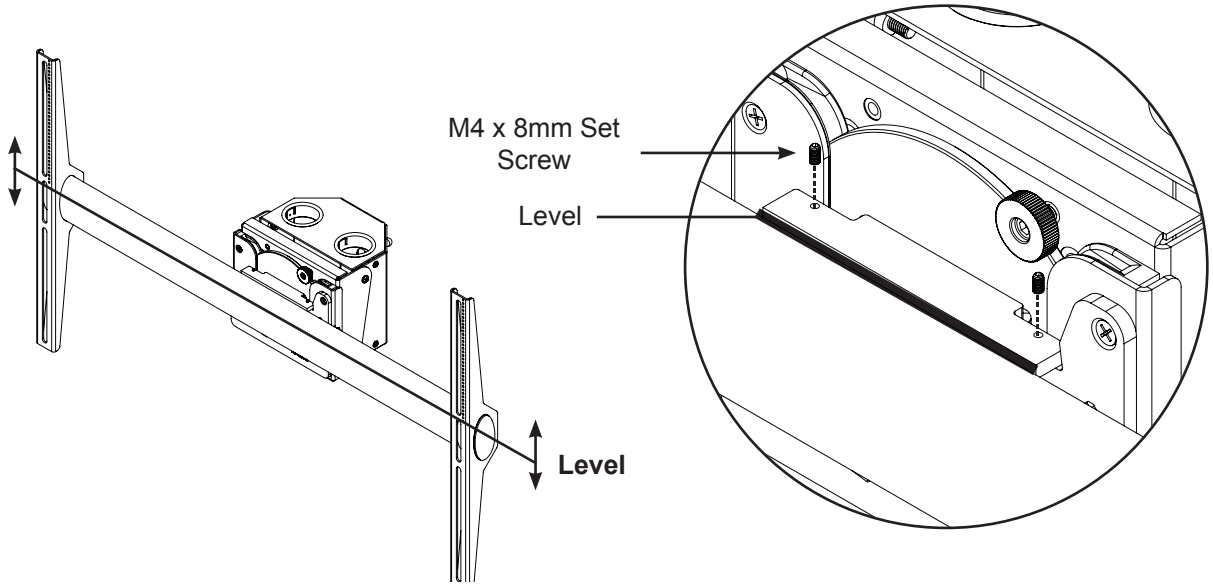

Adjust the level of the display arms by loosen/tighten (2) M4 x 8mm Set Screw.

12

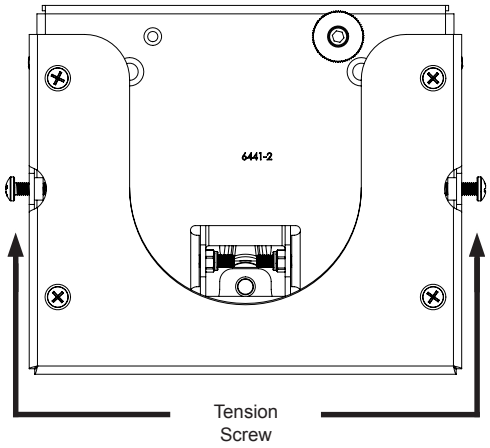

Tighten the two (2) screws (located on the side of the mounting block) once the final position is attained.

PREMIER MOUNTS
LIMITED LIFETIME WARRANTY

What and Who is Covered by this Limited Lifetime Warranty
Premier Mounts warrants all mounting products to be free from defects in material and workmanship for the lifetime of the original installation of the product.

What Premier Mounts Will Do
At the sole option of Premier Mounts, Premier Mounts will repair or replace any product or product part that is defective. If Premier Mounts chooses to replace a defective product or part, a replacement product or part will be shipped to you at no charge, but you must pay any related labor costs.

What is Not Covered: Limitations
Premier Mounts disclaims any liability for damage to mounts, adapters, displays, projectors, other property, or personal injury resulting, in whole or in part, from improper installation, modification, use or misuse of its products.

NOTWITHSTANDING ANYTHING TO THE CONTRARY IN THIS WARRANTY, THIS WARRANTY IS LIMITED TO FIVE YEARS FROM THE DATE OF PURCHASE IN THE EVENT THAT THE WARRANTED PRODUCT IS COMMERCIALLY RENTED OUT.

Electrical products and components, such as amplifiers, speakers, motors, switches remote controls and related electrical items, are backed by a 3-year warranty.

Premier Mounts disclaims all other warranties, express or implied, including warranties of merchantability and fitness for a particular purpose. Premier Mounts is not responsible for incidental or consequential damages, including but not limited to, inability to use its products or labor costs for removing and replacing defective products or parts. Some states do not allow the exclusion or limitation of incidental or consequential damages, so the above limitation or exclusion may not apply to you.

What Customers Must Do for Warranty Service
If you discover a problem that you think may be covered by the warranty, you must report it in writing to the address below within thirty (30) days. Proof of purchase (an original sales receipt) from the original consumer purchaser must accompany all warranty claims. Warranty claims must also include a description of the problem, the purchaser's name, address, and telephone number. General inquiries can be addressed to Premier Mounts Customer Service at 1-800-368-9700. Warranty claims will not be accepted over the phone or by fax.

Premier Mounts
Attn: Warranty Claim
2620 Palisades Drive
Corona, CA 92882 USA

How State Law Applies
This warranty gives you specific legal rights, and you may also have other rights which vary from state to state.

Premier Mounts intends to make this manual accurate and complete. However, Premier Mounts makes no claim that the information contained herein covers all details, conditions or variations, nor does it provide for every possible contingency in connection with the installation or use of this product. The information contained in this document is subject to change without notice or obligation of any kind. Premier Mounts makes no representation of warranty, expressed or implied, regarding the information contained herein. Premier Mounts assumes no responsibility for accuracy, completeness or sufficiency of the information contained in this document.

Warranty: http://www.mounts.com/warranty

PREMIER MOUNTS