THE INFORMATION ON THIS DOCUMENT IS THE SOLE PROPERTY OF PREMIER MOUNTS DIVISION OF GAMBER-JOHNSON AND SHALL NOT BE COPIED, REPRODUCED, USED OR DISCLOSED IN WHOLE OR IN PART WITHOUT THE WRITTEN CONSENT OF PREMIER MOUNTS DIVISION OF GAMBER-JOHNSON.

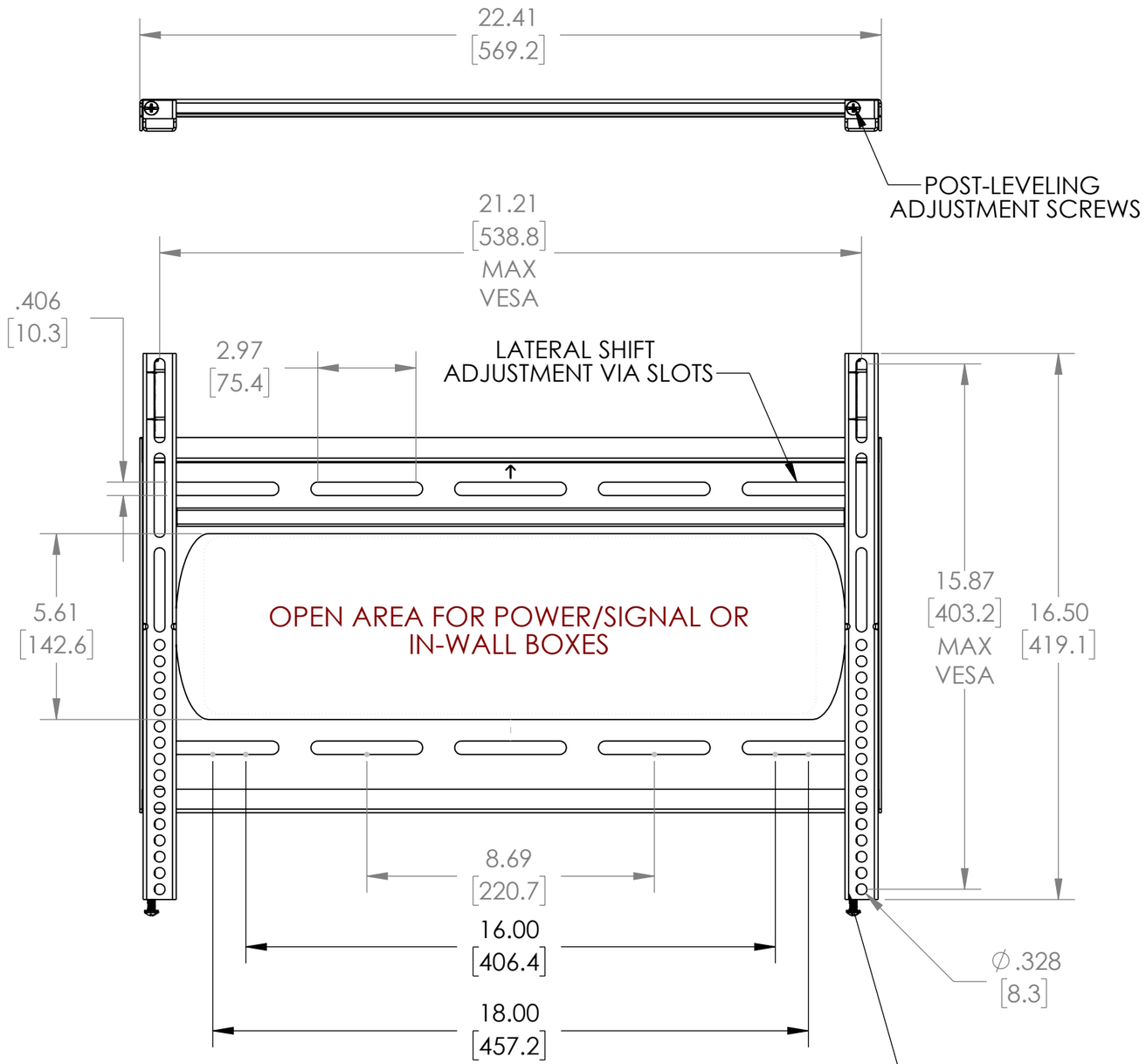

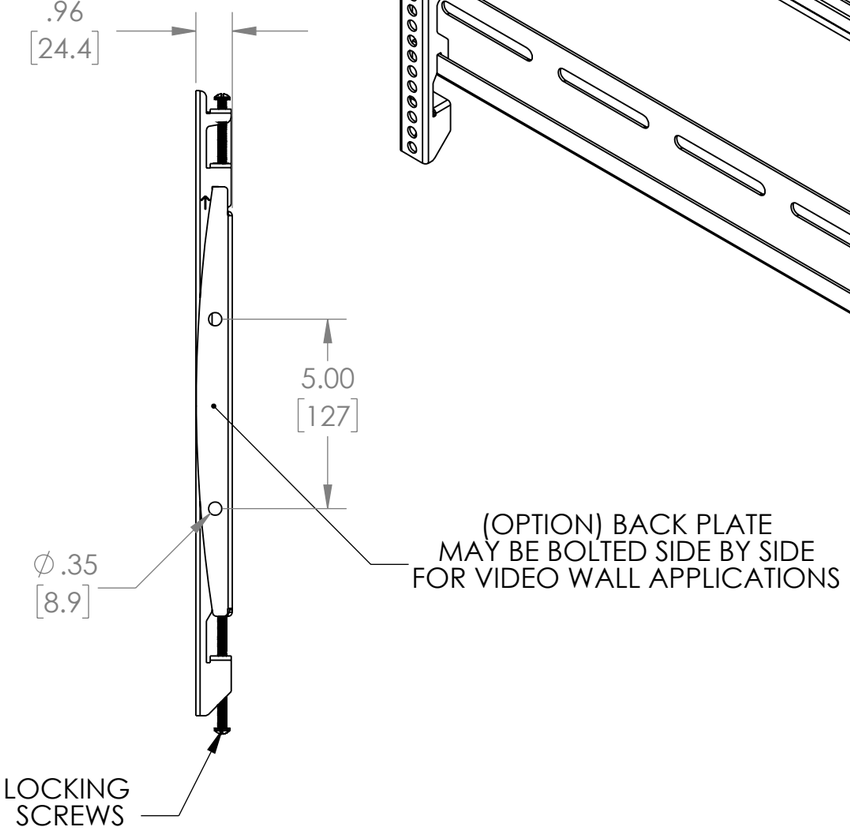

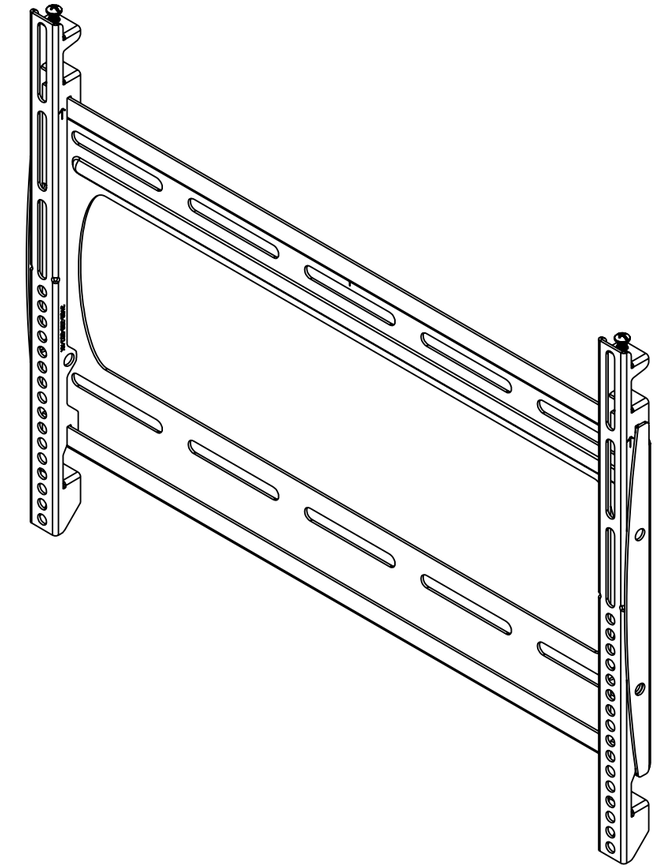

PREMIERMOUNTS.COM

WEIGHT CAPACITY: 130 LBS

DESCRIPTION: LOW PROFILE FLAT MOUNT				
PART NO. P2642F				
MAX. WEIGHT CACITY 130.0 LB.	DIMENSION ARE IN INCH AND [MM]	SCALE: 1:4	SHEET 1 OF 1	